Growermetal
Around ideas

GROWER TENKEEP®

ONE WASHER TEN KEEP

EN

DESCRIPTION

The safety washers **Grower TenKeep®** of Growermetal are flat washers that have the two surfaces with knurls of different geometry, specially designed in order to ensure **maximum performance against loosening of the bolted joints**, even in the presence of extreme vibrations and dynamic loads.

Grower TenKeep® safety washers are manufactured by Growermetal in **3 different versions** and can be used with bolts of all strength classes up to 12.9.

SIDE A

The side of the washer on the **head of the screw/ nut** side (side A) slides against the surface of the underhead of the screw/ nut when tightening the bolted joint. The advanced serration geometry of this side instead, counteracts very efficiently the loosening of the bolted joint connection.

This side of the washer also has a **chamfer on the hole which provides the dual function of:**

- **Avoiding any interference** with the radius under the screw head.
- Allowing the user to **orientate the washer correctly.**

SIDE B

The side of the washer which is in **contact with the bearing surface** (side B) becomes immediately solid to the bearing surface when the bolted joint is tightened, thanks to the exceptional grip of its knurling. The washer then **remains permanently solid to the bearing surface.**

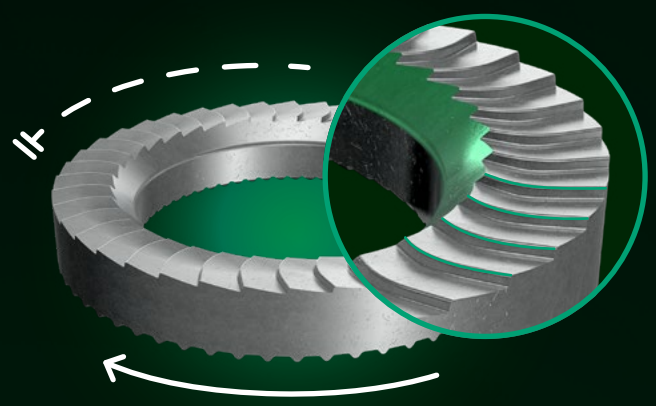

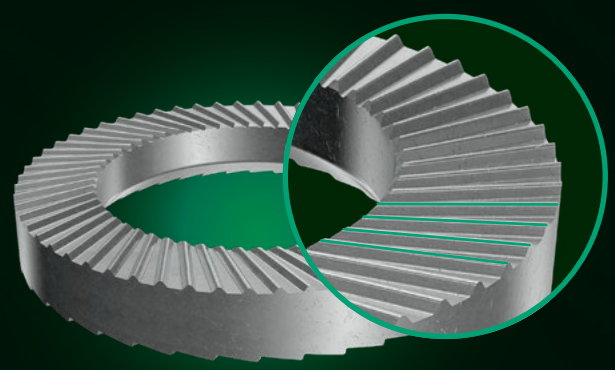

These features of the Grower TenKeep® washer guarantee 3 main technical advantages:

- The **friction conditions are defined and uniform**, not depending on the material and on the mechanical characteristics of the bearing surface. As a consequence the tightening torque to be applied in order to achieve the desired screw preload is always the same.
- During tightening and untightening of the bolted joint, the **Grower TenKeep® washer does not damage the bearing surface**, even on galvanised, painted or soft surfaces.
- The untightening **torque** is significantly **higher** (+40% minimum) **than the tightening torque.**

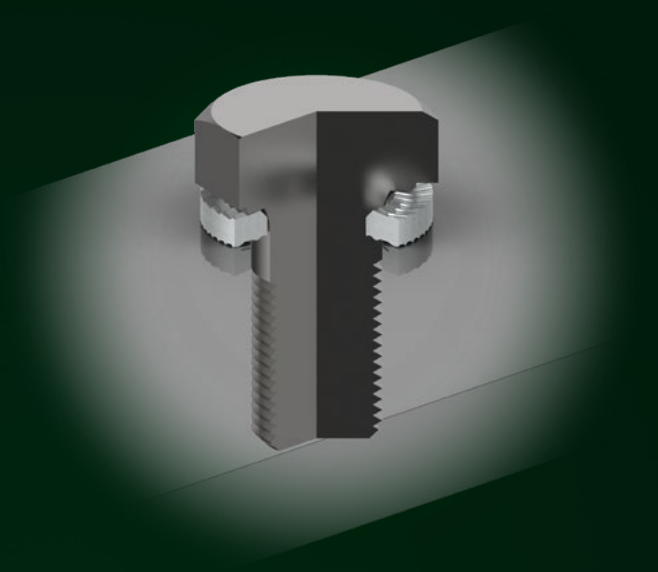

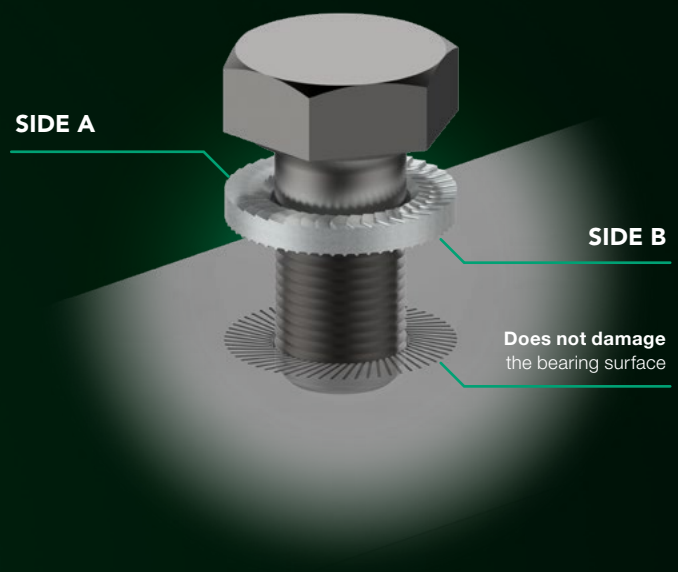

CHARACTERISTICS

Grower TenKeep® safety washers are manufactured by Growermetal in 3 standard series:

GROWER TENKEEP® | M

Medium Series, ideal for hexagonal head bolts.

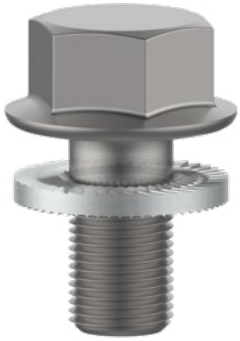

GROWER TENKEEP® | L

Large series, ideal for flange-headed bolts and for bearing surfaces made of soft materials (aluminium, plastics, etc...).

GROWER TENKEEP® | C

Cylindrical series, ideal for cylindrical head bolts.

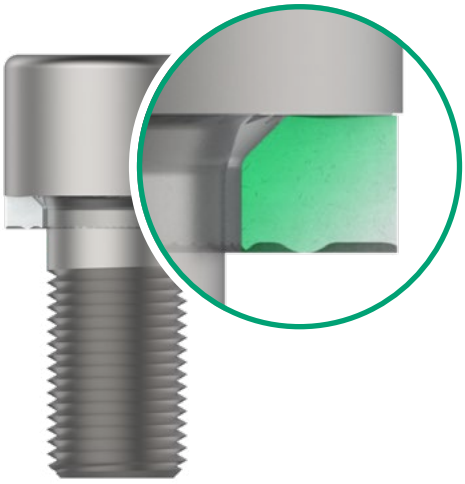

The hole geometry of all Grower TenKeep® washers has been specially designed in order to ensure that there is no geometric interference with the under-head radius of all screws according to ISO and DIN standards.

- **Standard material:** carbon steel quenched and tempered with a surface and core hardness of 510-560 Hv 10.
- **Standard surface treatment:** Delta Protekt® KL120 - Red corrosion resistance 1000 hours minimum according to NSS ISO 9227.

ADVANTAGES

- **Excellent locking performance** in the presence of vibrations and dynamic loads.
- **Precise match** between tightening torque and screw preload, regardless of the material of the bearing surface.
- **No damage of the bearing surface** during its application, even on galvanized or painted surfaces.
- **Untightening torque significantly higher** (+40% minimum) than the tightening torque.
- Guaranteed **absence of geometric interference** between washer hole and under-head radius of all screws according to ISO and DIN standards.
- **Minimum space requirement:** the washer always remains inside the screw head.
- All **Grower TenKeep®** washer series are also suitable for **applications with embedded holes**.

APPLICATIONS

In order to achieve maximum unscrewing performance, it is important that the **Grower TenKeep®** safety washers are correctly positioned. The hole on the A-side has a chamfer which also indicates the correct orientation of the washer during application.

The chamfer must be positioned on the side of the head of the screw or nut.

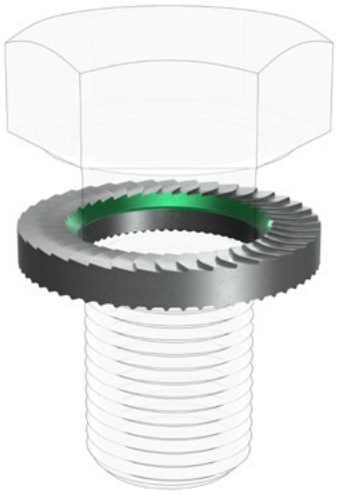

TIGHTENING TORQUES

Grower TenKeep® safety washers can be tightened to the yield strength recommended in the Growermetal technical tables, depending on the type of bolt and surface treatment used.

STANDARD APPLICATIONS

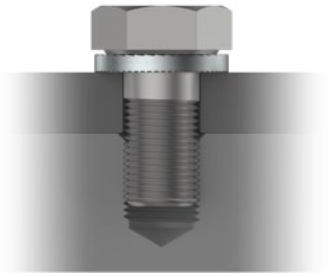

GROWER TENKEEP® | M

With threaded hole and hexagonal head screw.

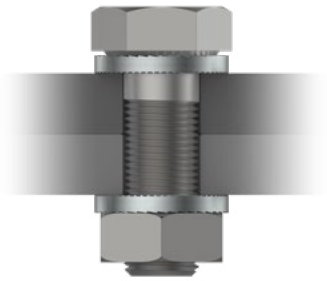

With through-hole and hexagonal head bolt.

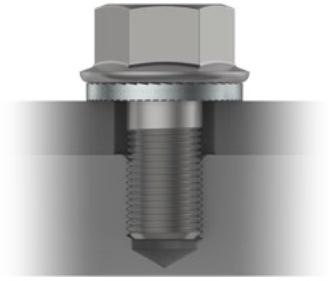

GROWER TENKEEP® | L

With wide holes and flanged head screw.

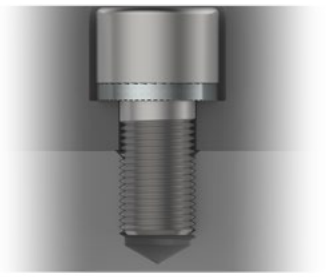

GROWER TENKEEP® | C

With bored hole and cylindrical head screw.

NOT RECOMMENDED APPLICATIONS

The application of the Grower TenKeep® washers is not recommended in the following cases:

- **Unsecured bearing surfaces** (e.g. presence of flat washer).
- **Too hard bearing surfaces** (>470 HV).
- **Too soft surfaces** (e.g. wood, rubber).

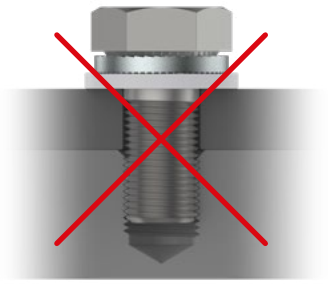

- The **Grower TenKeep®** L-series washer is **also suitable for slotted holes**.
- **Assembly-friendly**, thanks to the presence of an internal chamfer indicator.
- **Very high mechanical resistance**, usable with any type of bolts up to class 12.9.
- **Reusable for several times** with unaltered performance.
- **Functionality regardless** of the presence/ absence of lubricant.
- Standard surface coating with **very high corrosion resistance** and no risks of embrittlement due to the presence of hydrogen.
- **Excellent price/ performance ratio**.

DIMENSIONS

GROWER TENKEEP®

GROWER TENKEEP® M SERIES

Screw of	Internal diameter min-max	External diameter min-max	Thickness min-max	Kg/1000 pieces	N° pieces standard packaging
M5	5.20-5.40	8.50-8.80	1.20-1.50	0.40	2000
M6	6.30-6.50	10.70-11.00	1.20-1.50	0.72	1000
M8	8.50-8.70	14.00-14.30	1.70-2.00	1.46	1000
M10	10.50-10.70	17.40-17.70	2.20-2.50	2.85	1000
M12	12.70-13.00	19.60-20.00	2.20-2.50	3.40	500
M14	14.70-15.00	22.80-23.20	2.70-3.00	5.48	250
M16	16.70-17.00	26.10-26.50	3.00-3.50	8.51	250
M18	18.70-19.00	29.40-29.80	3.00-3.50	10.83	250
M20	20.80-21.20	32.60-33.20	4.00-4.50	16.75	100
M22	22.80-23.20	36.50-37.10	4.00-4.50	21.46	100
M24	24.80-25.20	39.20-39.80	4.50-5.00	27.19	100
M27	28.60-29.00	44.60-45.20	5.00-5.50	38.21	50
M30	31.60-32.00	50.20-50.80	5.50-6.00	54.16	50

GROWER TENKEEP® L SERIES

M6	6.30-6.50	13.20-13.50	1.20-1.50	1.14	1000
M8	8.50-8.70	16.60-16.90	1.70-2.00	2.36	1000
M10	10.50-10.70	20.40-20.70	2.20-2.50	4.48	500
M12	12.70-13.00	24.20-24.60	2.20-2.50	6.26	250
M14	14.70-15.00	28.10-28.50	2.70-3.00	10.21	250
M16	16.70-17.00	32.30-32.70	3.00-3.50	15.97	100
M20	20.80-21.20	42.30-42.90	4.00-4.50	35.45	50

GROWER TENKEEP® C SERIES

M6	6.30-6.50	9.70-10.00	1.20-1.50	0.48	1000
M8	8.50-8.70	12.70-13.00	1.70-2.00	1.06	1000
M10	10.50-10.70	15.70-16.00	2.20-2.50	2.03	1000
M12	12.70-13.00	17.60-18.00	2.20-2.50	2.30	1000
M14	14.70-15.00	20.60-21.00	2.70-3.00	3.80	500
M16	16.70-17.00	23.60-24.00	3.00-3.50	5.94	500
M18	18.70-19.00	26.60-27.00	3.00-3.50	7.60	250
M20	20.80-21.20	29.40-30.00	4.00-4.50	11.63	250

Dimensions in mm

TECHNICAL DATA SHEET

GROWER TENKEEP®

Type of material	Carbon Steel C67 EN 10132 - 1.1231 or equivalent
Heat treatment of the material	Hardened (quenching+tempering)
Hardness of the washer	510-560 Hv 10
Standard surface treatment	Delta Protekt® KL120
Corrosion resistance	Minimum 1000 hours NSS ISO 9227
Resistance grade screws (nuts)	Up to 12.9 (12)
Type of thread	Suitable for right hand thread bolts with fine and coarse pitch
Operating temperatures	From -20 °C to 250 °C
Compliance with environmental regulations	RoHs – Reach - ELV
Standard bolts to be combined with **Grower TenKeep®** M-series	Hexagonal head bolts according to ISO and DIN standards
Standard bolts to be combined with **Grower TenKeep®** L- series	Flanged head bolts according to ISO and DIN standards
Standard bolts to be combined with **Grower TenKeep®** C-series	Cylindrical head bolts according to ISO and DIN standards
Standard dimensions **Grower TenKeep®** M series	From M5 to M30
Standard dimensions **Grower TenKeep®** L series	From M6 to M20
Standard dimensions **Grower TenKeep®** C series	From M6 to M20

POLIEDROSTUDIO® Ed. 12/2019

GROWERMETAL®
PATENTED
GROWER TENKEEP®

Growermetal
Around ideas

Growermetal S.p.A
Via Nazionale 3, 23885 Calco (Lc), Italy
Phone: +39 (039) 9535300 - Fax: +39 (039) 9535400
info@growermetal.it

growermetal.com