Single coiled washer

Rondella grower

Federring

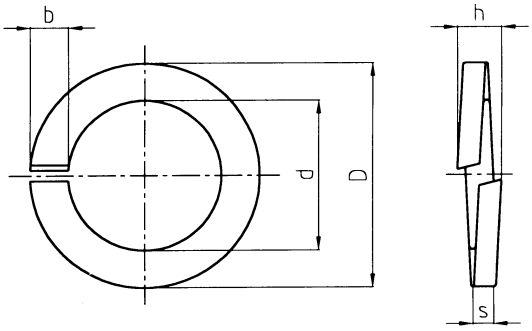

DIN 127 B inches

CARBON STEEL C 60 EN 10132

DIMENSIONS AND FEATURES							PACKAGING		
For screws of	d min.-max.	D max.	b min.-max.	s min.-max.	h min.-max.	Kg/1000 pieces	No. of pcs standard packaging	No. of pcs bulk packaging	No. of pcs micro packaging
1/4"	6.55-6.85	12.15	2.35-2.65	1.50-1.70	3.00-3.60	0.792	1000	12500	
3/8"	9.80-10.20	17.60	3.30-3.70	2.05-2.35	4.10-4.90	2.262	1000	4500	
7/16"	11.40-11.80	20.20	3.80-4.20	2.35-2.65	4.70-5.60	3.245	1000	3250	
1/2"	13.10-13.50	21.90	3.80-4.20	2.35-2.65	4.70-5.60	3.663	500	2500	
3/4"	19.50-20.10	32.50	5.80-6.20	3.80-4.20	7.60-9.00	13.515	250	650	
1"	25.80-26.60	41.10	6.75-7.25	4.80-5.20	9.60-11.40	28.829	100	350	

Dimensions in mm

Technical details:
Hardness: 430 - 530 Hv.
Tightening couples: see table.
Chemical analysis of raw material: see table.

Anticorrosion surface covering:
Burnishing and light oiling.
White mech. zinc plating 12my Cr6 free.
Yellow mech. zinc plating 12my Cr6 free.
Delta Protekt® KL 100 6-10 my.
Geomet® 321 type A 5-7 my.
Other finishings by request.