Double coil spring washer for railway tracks

Grower doppia per armamento ferroviario

Doppelte Oberbau Federringe

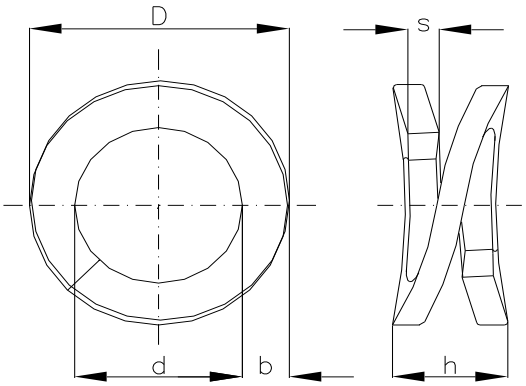

UIC 864 - UNI 6217

SPRING STEEL 38 Si 7 EN 10089

STAINLESS STEEL AISI 316 EN 10088-3

DIMENSIONS AND FEATURES							PACKAGING	
For screws of	d min.-max.	D max.	b min.-max.	s min.-max.	h residual	Kg/1000 pieces	N° of pcs standard packaging	N° of pcs bulk packaging
21	21.00-22.50	42.90	9.80-10.20	5.80-6.20	16.80	84.000	300	4000
22	22.00-23.00	43.80	9.60-10.40	5.70-6.10	16.80	84.500	300	4000
24	23.40-24.60	45.00	9.80-10.20	5.80-6.20	17.80	88.000	300	4000
25	25.00-26.20	46.60	9.80-10.20	5.80-6.20	17.80	92.000	300	4000
26	25.40-26.60	47.00	9.80-10.20	5.80-6.20	17.80	92.000	300	4000
28	28.00-29.20	53.60	11.80-12.20	5.80-6.20	17.80	122.000	200	3000

Dimensions in mm

Technical details:
Hardness: 43 - 49 HRc.
Chemical analysis of raw material: see table.
Stainless steel AISI 316 (A4) has a very high acid resistance and it is a antimagnetic material.

Anticorrosion surface covering:
Burnishing and light oiling.
White mech. zinc plating 12my Cr6 free.
Yellow mech. zinc plating 12my Cr6 free.
Delta Protekt® KL 100 6-10 my.
Geomet® 321 type A 5-7 my.
Hot zinc galvanizing
Other treatments on request.

Features and specific use:
Split washers to be used in railway industry.
The dimensions D21 and D25 can be also supplied in the patented version with partial teeth on the surface.
The teeth guarantee a definite improvement of the unscrewing performance of the washer.